DATASHEET

Blighter® BRTS Mk 2

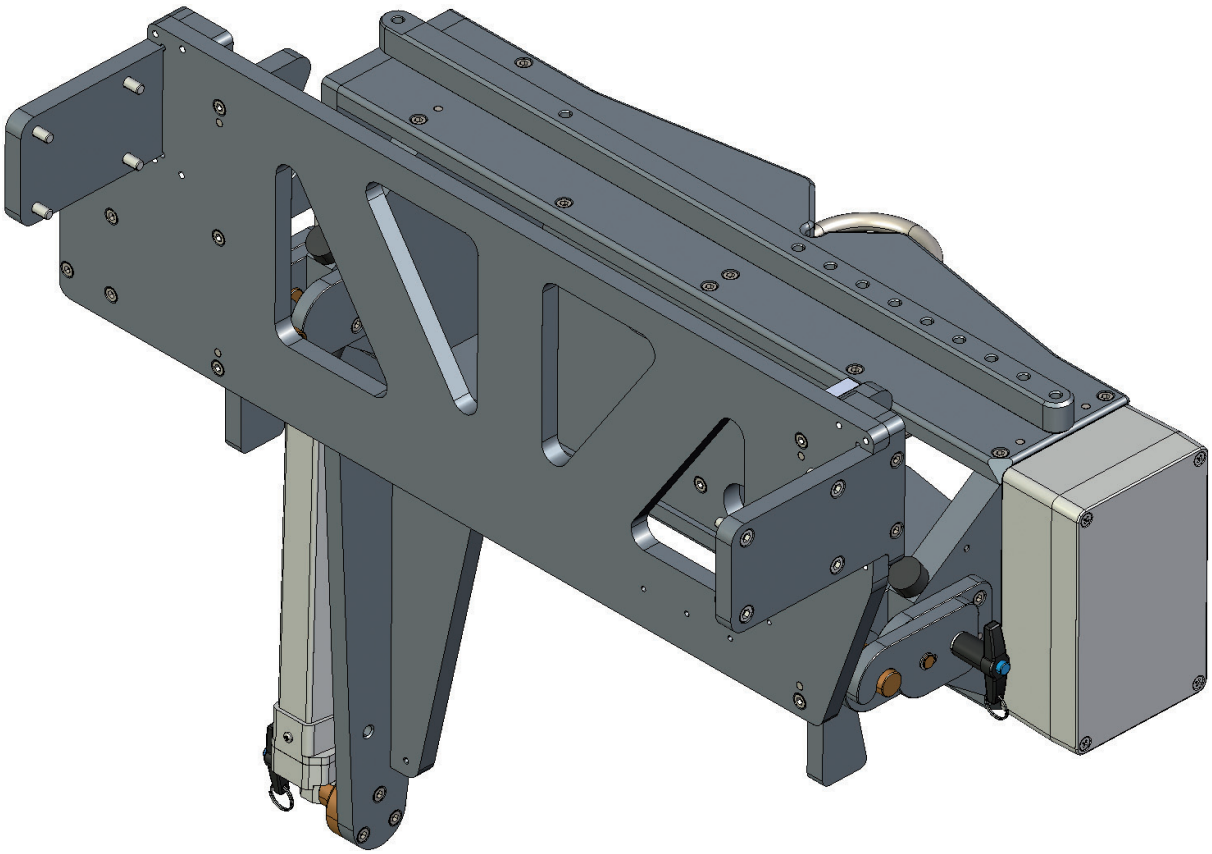

- Payload capacity of up to 45 kg (per unit)
- Inclinometer-derived absolute position feedback
- Manual set point adjustment bar included
- Daisy chain option for dual radar units
- Removable radar mount for easy installation
- Modular components allow simple repair

The Blighter Radar Tilting System (BRTS) Mk 2 provides accurate control of the elevation tilt position of individual radar units. Designed principally for use with Blighter's A400 series air security radars, the BRTS Mk 2 allows the radar to maintain elevation control in situations where it needs to detect and then track flying objects, especially UAVs, at various altitudes and also where terrain variation requires the radar to be tilted in order to maximise ground coverage.

The BRTS Mk 2 includes a linear-actuator-driven tilt angle range of -40° to +40°.

The BRTS Mk 2 is designed specifically for the Blighter product range and offers high reliability in extreme conditions. It provides precise control and feedback of radar position for full integration into the BlighterView HMI. The tilt adjustment speed of the BRTS Mk 2 has been carefully selected to ensure that its movement does not affect the ultra-slow movement detection capability of the Blighter radar.

BRTS Mk 2 includes new features to simplify installation, including a removable radar mounting attachment, tool-less locking pins, and removable actuator mechanism. The position feedback device mounted on each unit measures absolute position from vertical, allowing the BRTS Mk 2 to be rapidly installed and configured to a pre-set value without additional tools.

The BRTS Mk 2 is available for single ('A402') and dual radar units ('A422') with the second unit being daisy-chained to the first to provide a single serial interface to the Blighter radar system.

Operation

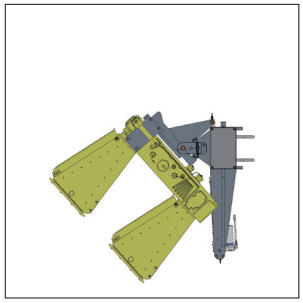

BRTS Mk 2 Look Down: -40°

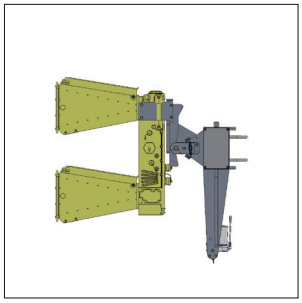

BRTS Mk 2 Horizontal: 0°

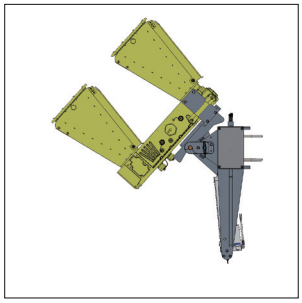

BRTS Mk 2 Look Up: +40°

Specification

General

- Unit weight (total): 19 kg (41.9 lb.)
- Unit weight (radar mount only): 6 kg (13.2 lb.)
- Unit weight (fixed assembly only): 13 kg (28.7 lb.)
- Payload weight: up to 45 kg (99.2 lb.)

Mechanical

- Actuator driven angular range: from -40° to +40°
- Manual replacement bar set points: -40°, -30°, -20°, -10°, 0°, +10°, +20°, +30° and +40°
- Pole mount diameter: 60 to 90 mm

Performance

- Tilt speed (approx.)*: 2.5°/s
- Typical travel time over 80° range*: less than 32 s
- Output torque (approx.): 118 Nm

*Dependent on wind force and payload weight

Electrical

- Power supply: 24 V (DC)
- Communications: RS-232

Environmental

- Operating temperature: from -32° C to +60° C (from -25° F to +140° F)
- IP rating: IP65

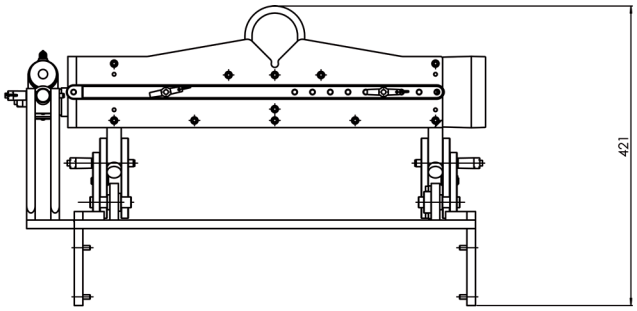

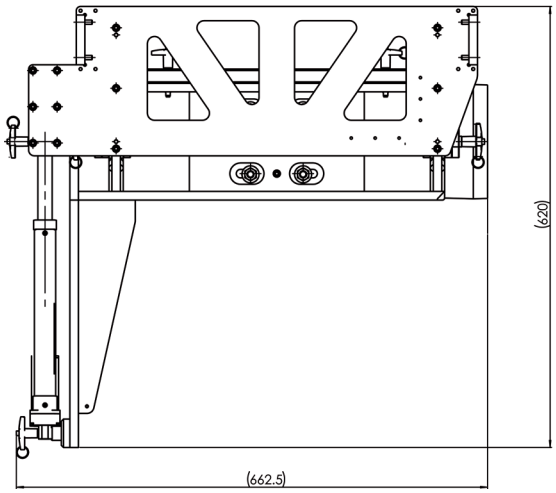

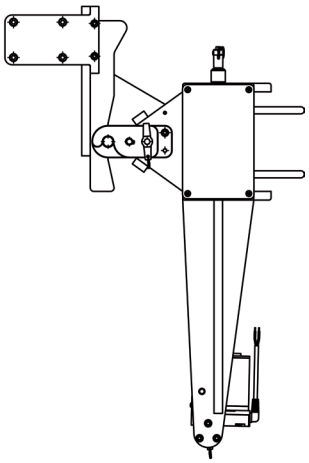

BSS-1802 ©2019 Blighter Surveillance Systems Ltd

Errors and omissions excepted. Blighter Surveillance Systems Ltd reserves the right to modify specifications without notice. Blighter radars are protected by a number of international patents. The Blighter name is an international registered trademark.

Blighter Surveillance Systems Ltd
Iceni House
London Road
Great Chesterford
Saffron Walden
CB10 1NY
United Kingdom

www.blighter.com
hello@blighter.com

Tel: +44 1223 491122
Fax: +44 1223 491123